ROTEX® AFN and BFN
Flexible jaw couplings

Flange programme

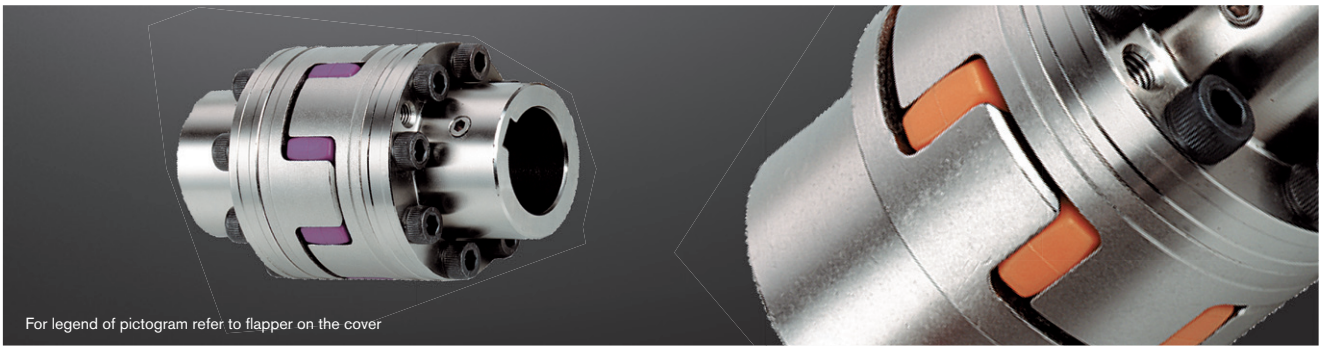

Components

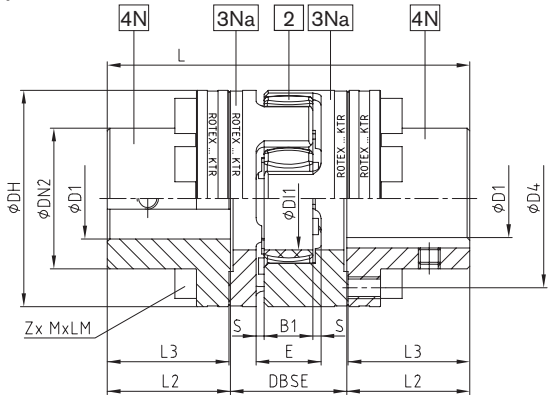

Type AFN

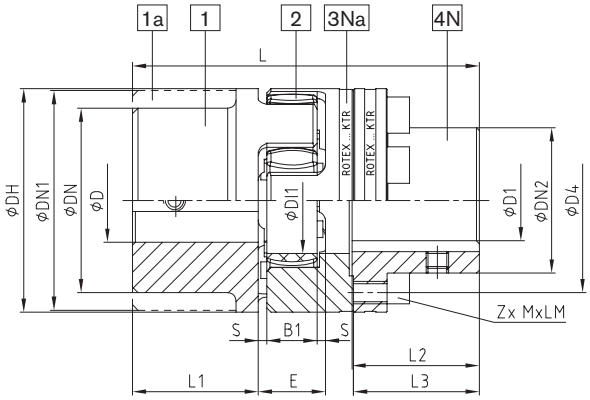

Type BFN

ROTEX® Type AFN and BFN																			
Size	Pilot bore D	Dimensions [mm]													Cap screws [3] DIN EN ISO 4762 - 12.9			
		Component 4N max. finish bore D1	DH	DN2	D4	DI1	DBSE	L1, L2	E	B1	S	L3	L					
													AFN	BFN	MxLM	Z	pitch [2]	T_A [1] [Nm]
24	Jaw coupling: page 38 to 40 Stock programme: page 36 and 37	27	55	36	45	27	33	30	18	15	2.0	30.5	94	86	M5x16	8		10
28		30	65	42	54	30	39	35	20	15	2.5	35.5	110	100	M6x20	8	8x45°	17
38		38	80	52	66	38	43	45	24	18	3.0	45.5	134	124	M8x22	8		41
42		45	95	62	80	46	48	50	26	20	3.0	51.0	150	138	M8x25	12	16x22.5°	41
48		52	105	70	90	51	50	56	28	21	3.5	57.0	164	152	M8x25	12		41
55		60	120	80	102	60	60	65	30	22	4.0	66.0	192	176	M10x30	8	8x45°	83
65		70	135	94	116	68	65	75	35	26	4.5	76.0	217	201	M10x30	12	16x22.5°	83
75		80	160	108	136	80	75	85	40	30	5.0	86.5	248	229	M12x40	15		120
90		105	200	142	172	100	82	100	45	34	5.5	101.5	285	265	M16x40	15		295
100		115	225	158	195	113	97	110	50	38	6.0	111.5	320	295	M16x50	15		295
110		130	255	178	218	127	103	120	55	42	6.5	122.0	347	321	M20x50	15	20x18°	580
125		150	290	206	252	147	116	140	60	46	7.0	142.0	400	370	M20x60	15		580
140		170	320	235	282	165	128	155	65	50	7.5	157.5	443	409	M20x60	15		580
160		200	370	270	325	190	146	175	75	57	9.0	177.5	501	463	M24x70	15		1000
180		230	420	315	375	220	159	195	85	64	10.5	198.0	555	515	M24x80	18	24x15°	1000

[1] Screw tightening torque T_A [Nm].
[2] Thread in the driving flange between the cams.
[3] Coupling is delivered not assembled.

Ordering example:	ROTEX® 24	AFN	92 ShA	4N	Ø38	4N	Ø35
	Coupling size	Type	Spider hardness	Component	Finish bore	Component	Finish bore